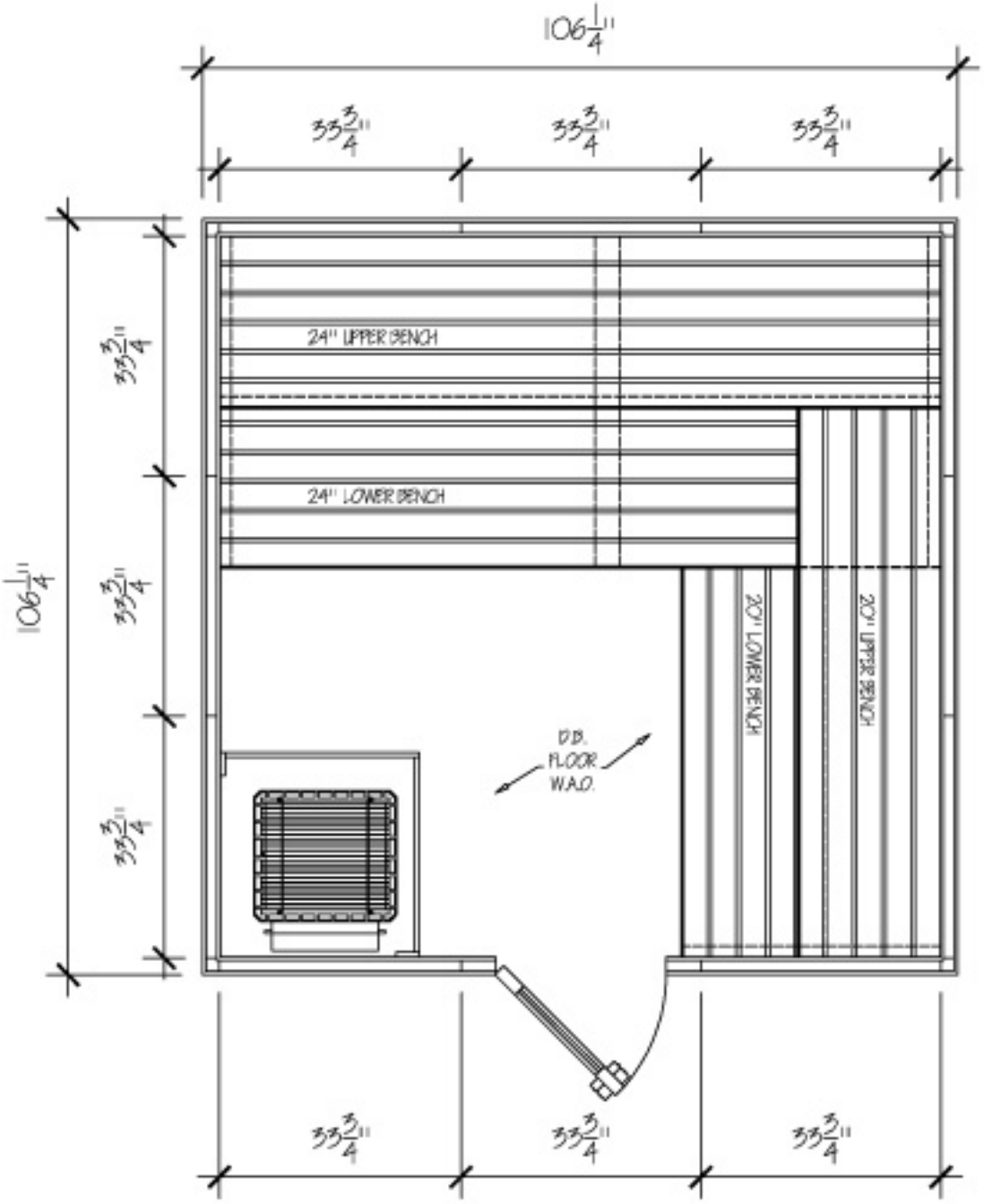

Drawing #: MP99	Invoice #:
Scale: 1/2" = 1'	Bench Support ----------
	Bench Overlap ----------

Company:
Project:

Type: Modular
Wood Type: 1/2" x 4" Cedar T&G to be applied Vertically
Ceiling Height: 84"
Door Model: G2PL-M Door R.O: N/A Door Jamb: N/A
Note: See "Construction Standards" for drawing assumptions

Approved By:

Date :

Alpine Sauna & Steam
1-866-697-2862
fax. 941-360-2956
sales@alpinesauna.com
www.alpinesauna.com